MODIFICACIÓN: Modification: MODEL IS UPDATED

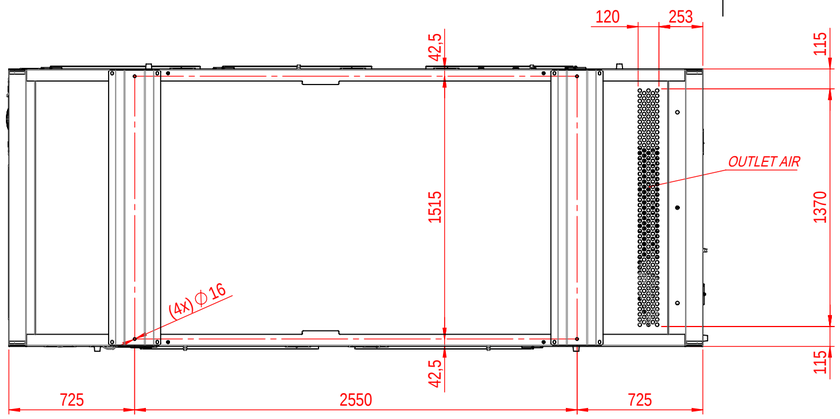

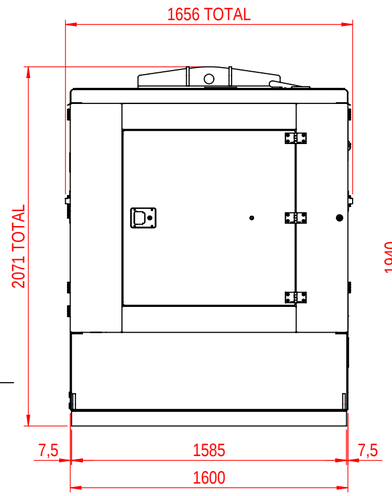

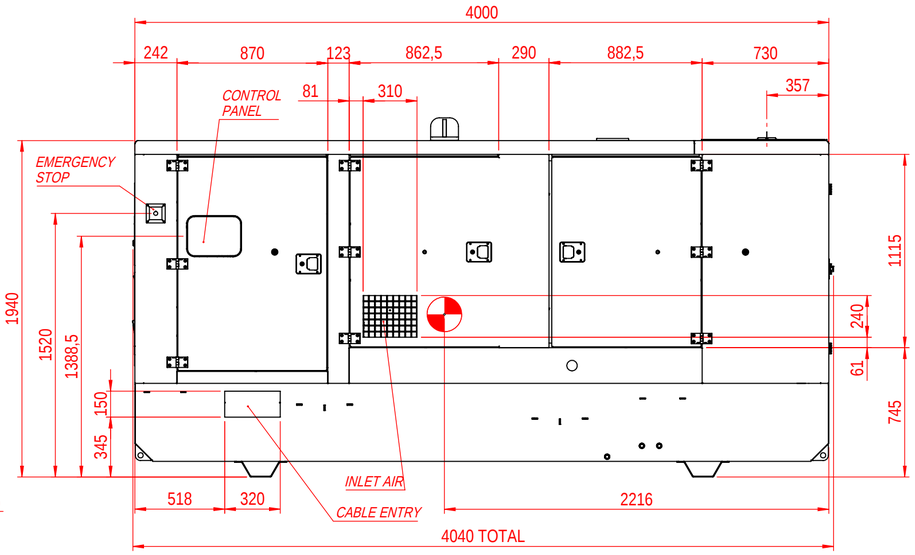

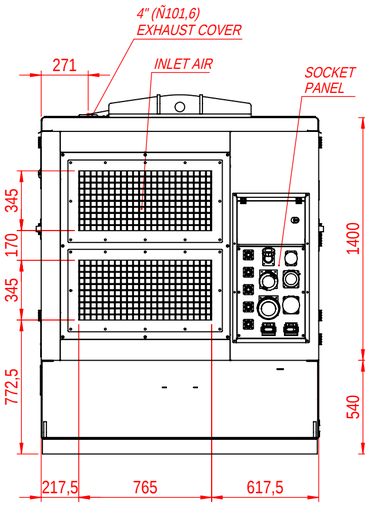

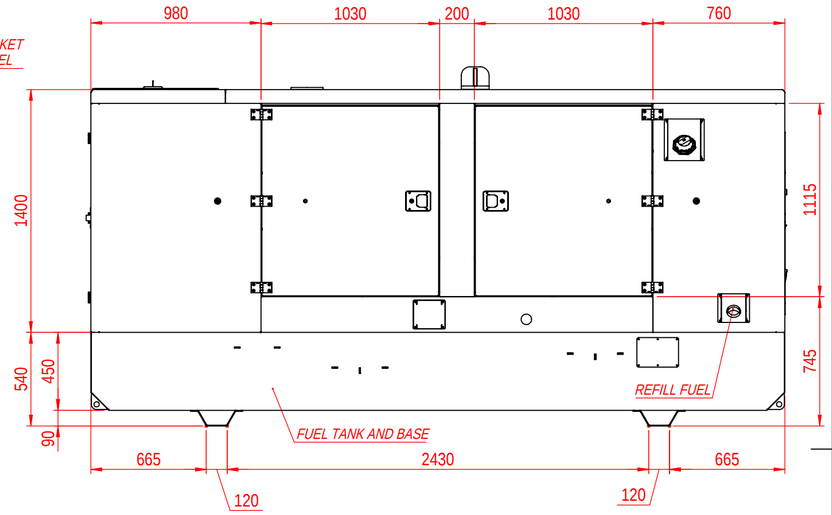

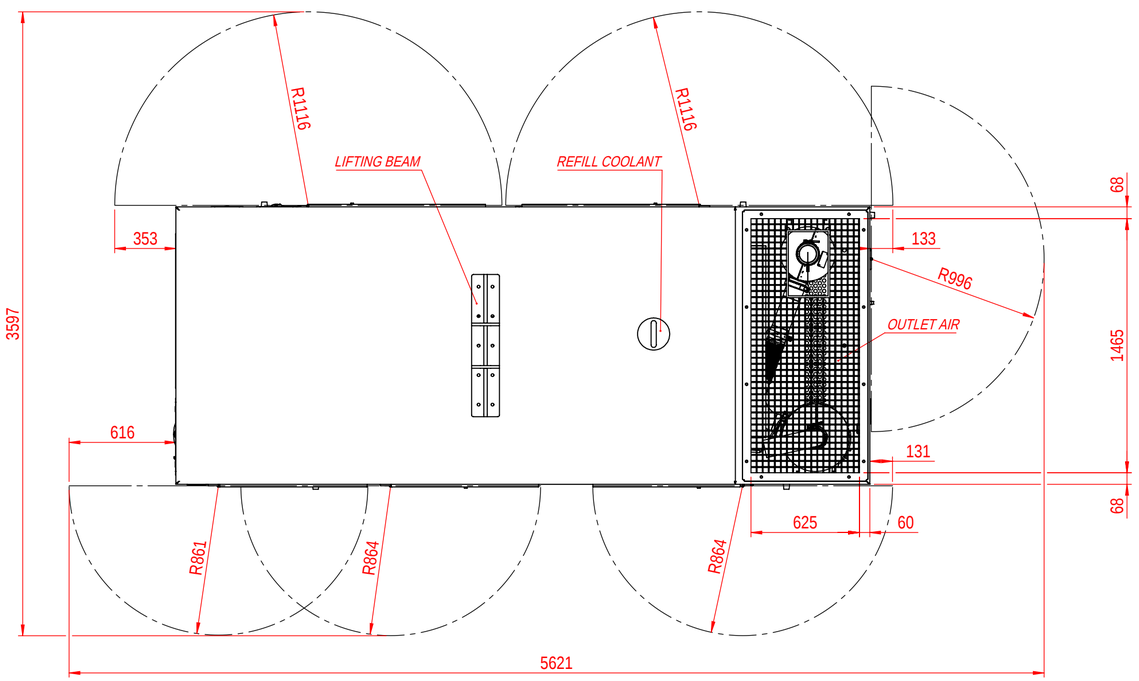

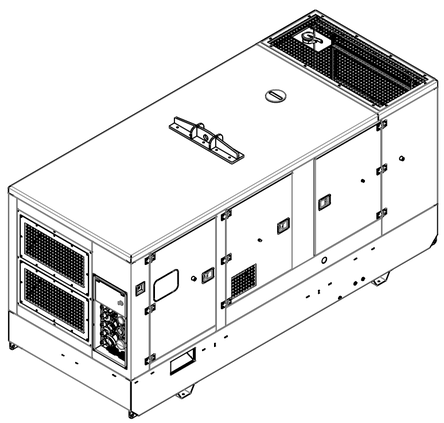

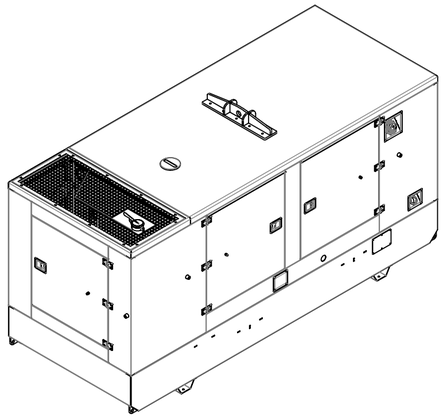

CENTER OF GRAVITY, WILL VARY SLIGHTLY DEPENDING ON:
- THE ENGINE-ALTERNATOR COMBINATION
- THE AMOUNT OF FUEL

DIBUJADO POR: Drawn by:	JLOCAα A	FECHA: Date:	31/03/2022	DAGARTECH® ENERGY SOLUTIONS	NORMAS ISO 2768-c
APROBADO POR: Approved by:	FTAMARIT	FECHA: Date:	18/12/2023		A2
MODIFICADO POR: Modified by:	FTAMARIT	FECHA: Date:	18/12/2023		

DESCRIPCIÓN: Description:

DAGARTECH-GENSET_RENTAL-PLUS-EK-EU5

Measures in mm.	VERSIÓN: Version: 03	ESCALA: Scale: 1:25
We reserve the right to change without notice		HOJA: Sheet: 1/1