MODIFICACIÓN:
Modification: NEW ENGINE CONFIGURATION IS ADDED

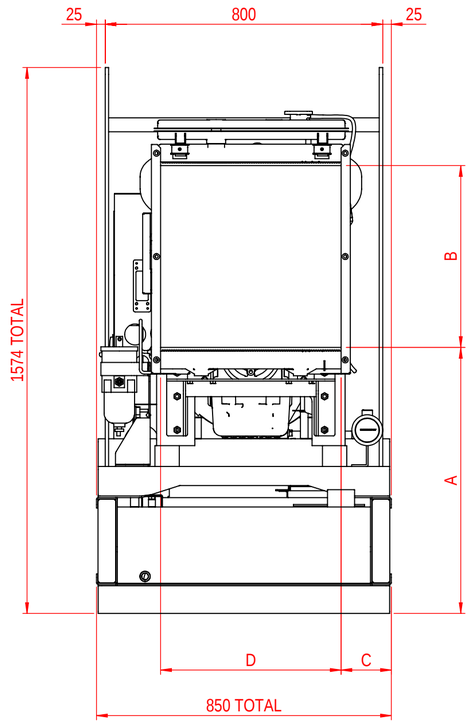

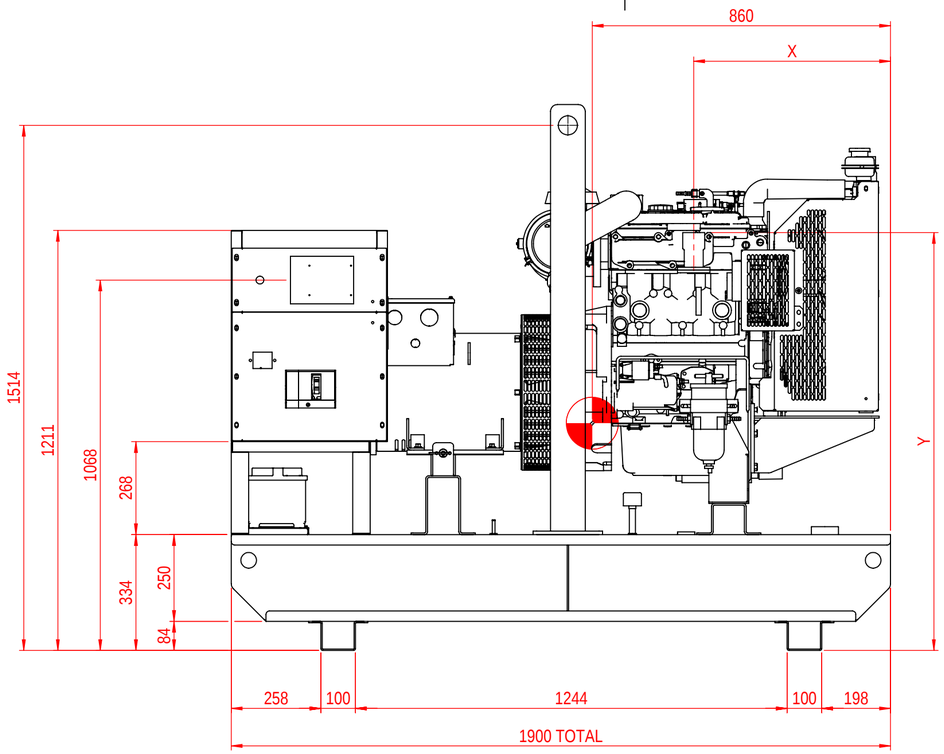

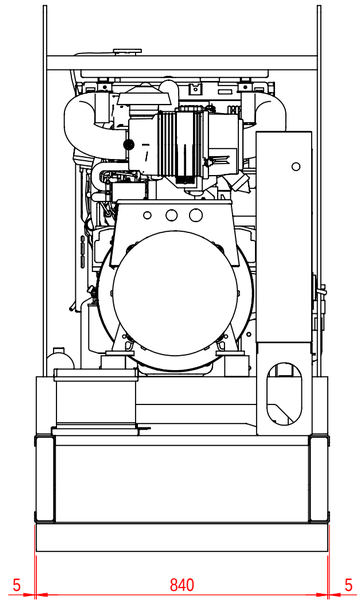

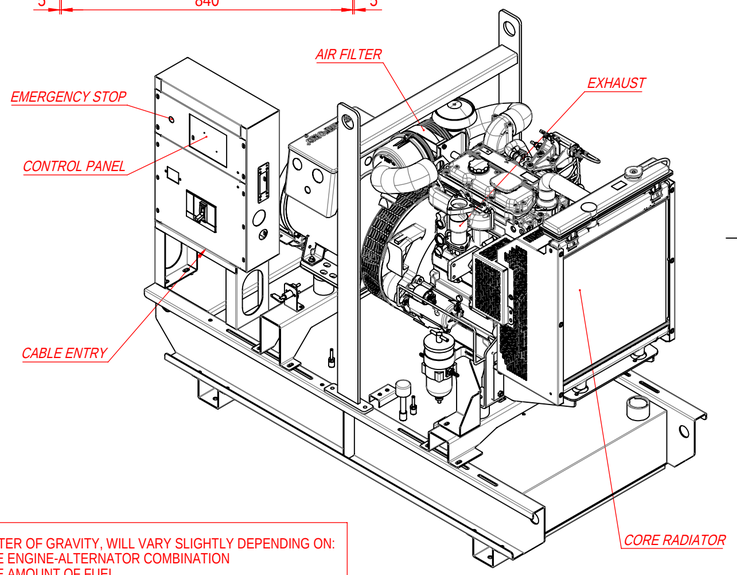

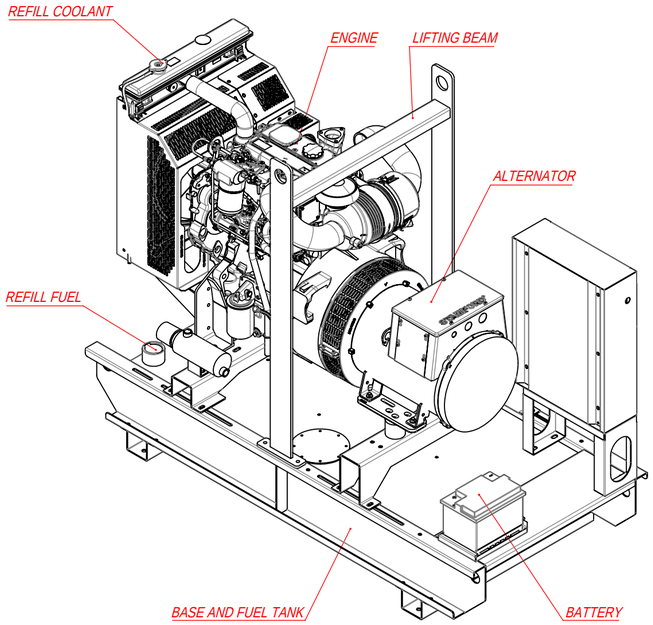

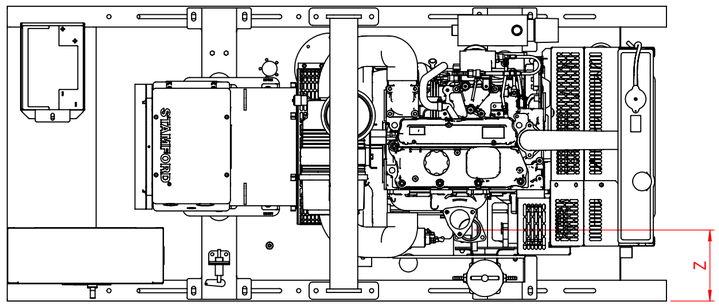

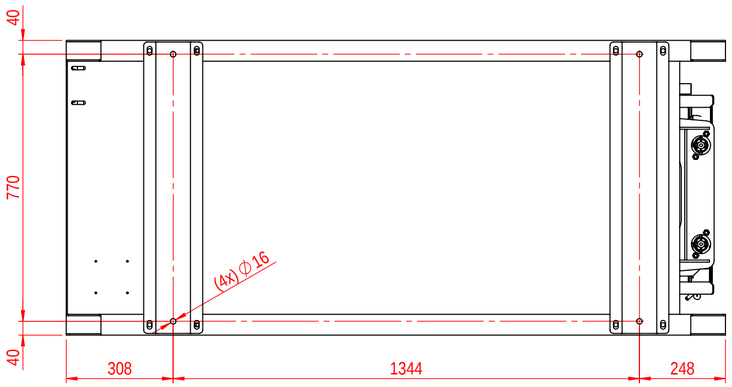

CENTER OF GRAVITY, WILL VARY SLIGHTLY DEPENDING ON:
- THE ENGINE-ALTERNATOR COMBINATION
- THE AMOUNT OF FUEL

ENGINE	CORE RADIATOR				EXHAUST			
	A	B	C	D	X	Y	Z	Ñ
PERKINS 1103A-33G	773	524	145	520	711	1345	235	2.5" (á63.5)
PERKINS 1103A-33TG1	767	524	145	520	567	1205	205	2.5" (á63.5)
PERKINS 1103A-33TG2	767	524	145	520	582	1205	205	2.5" (á63.5)
BAUDOUIN 4M06G35	625	542	138	534	644	1158	214	2.5" (á63.5)

DIBUJADO POR: Drawn by:	JLOCAø A	FECHA: Date:	18/09/2020
APROBADO POR: Approved by:	FTAMARIT	FECHA: Date:	18/07/2023
MODIFICADO POR: Modified by:	FTAMARIT	FECHA: Date:	18/07/2023

DAGARTECH® ENERGY SOLUTIONS

NORMAS ISO 2768-c

A2

DESCRIPCIÓN:
Description:

DAGARTECH-GENSET_INDUSTRIAL-2K

Measures in mm.

Dagartech reserves the right to change

VERSIÓN: Version: 03

ESCALA: Scale: 1:12.5

HOJA: Sheet: 1 / 1