MODIFICACIÓN: Modification: DRAWING IS UPDATED

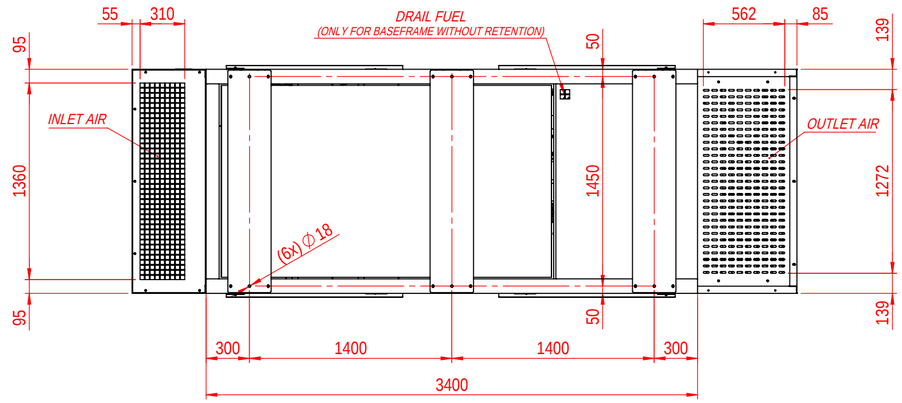

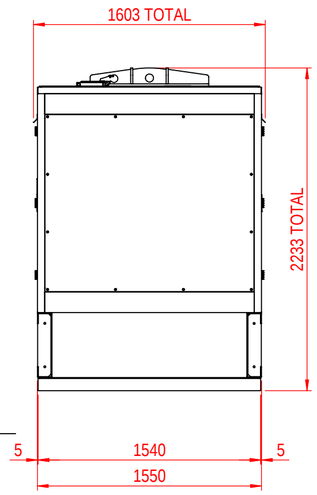

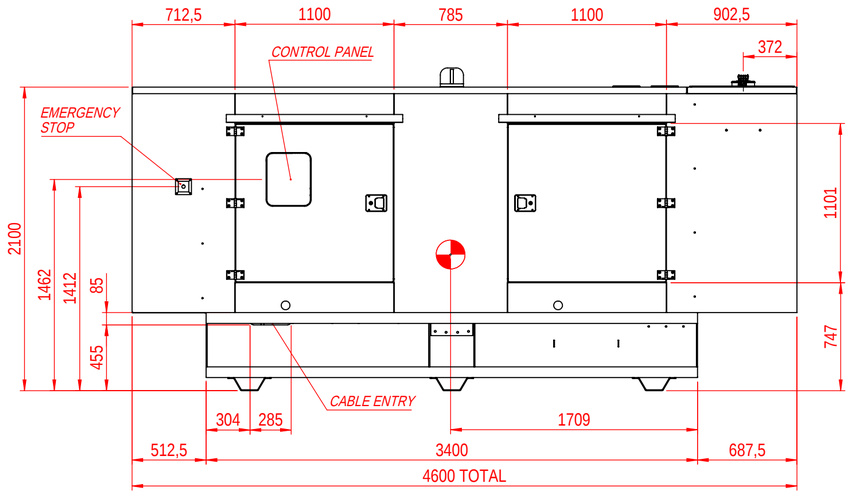

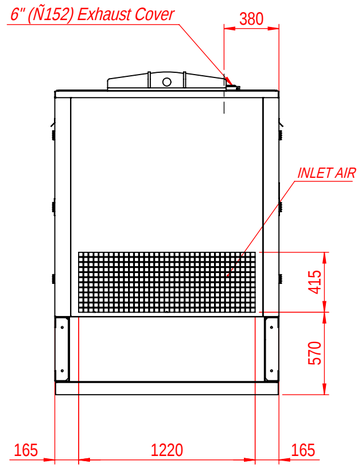

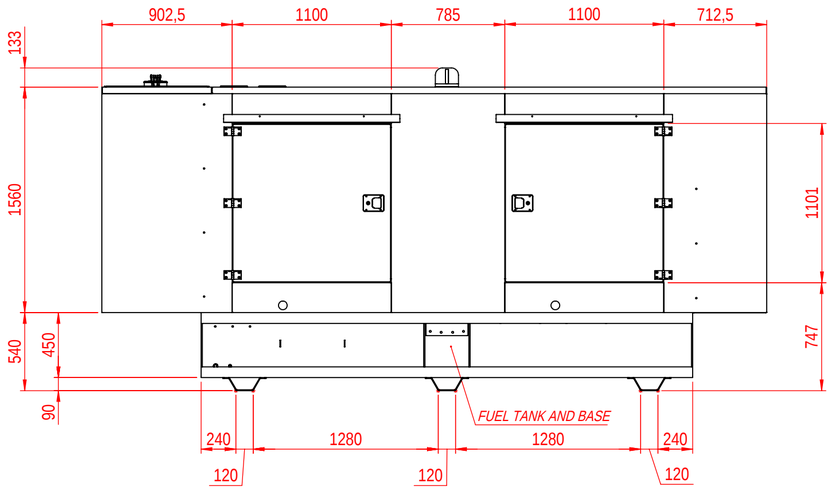

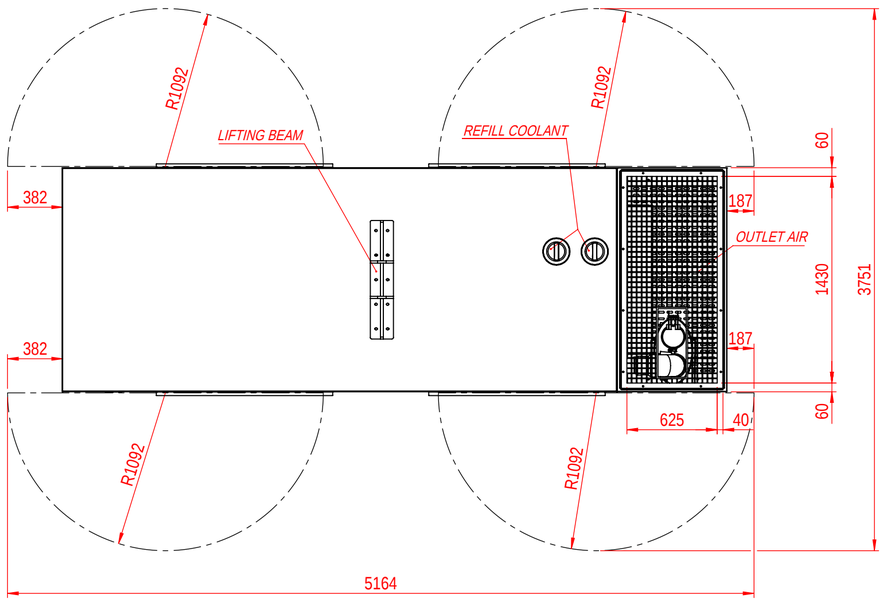

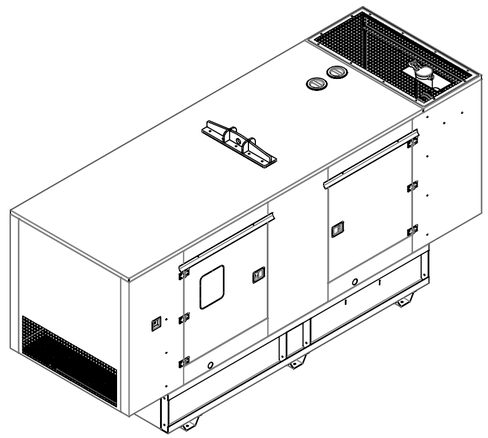

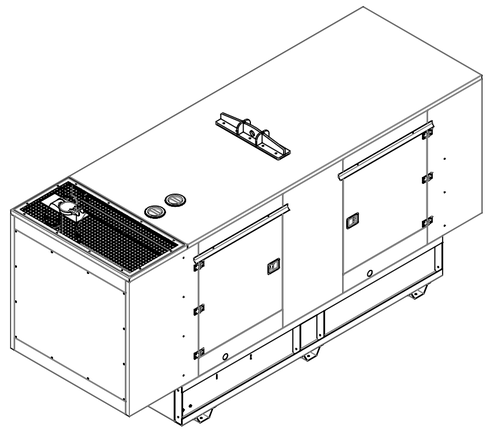

CENTER OF GRAVITY, WILL VARY SLIGHTLY DEPENDING ON:
- THE ENGINE-ALTERNATOR COMBINATION
- THE AMOUNT OF FUEL

DIBUJADO POR: Drawn by:	JLOCA¤ A	FECHA: Date:	09/10/2020	DAGARTECH® ENERGY SOLUTIONS	NORMAS ISO 2768-c
APROBADO POR: Approved by:	FTAMARIT	FECHA: Date:	10/03/2023		A2
MODIFICADO POR: Modified by:	FTAMARIT	FECHA: Date:	10/03/2023		

DESCRIPCIÓN: Description:

DAGARTECH-GENSET_BALANCE-FKB-FK1B

Measures in mm.	VERSIÓN: Version: 02	ESCALA: Scale: 1:30
Dagartech reserves the right to change		HOJA: Sheet: 1/1